Tchibo

Mini camera

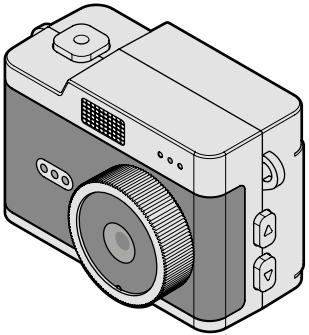

(en) **Instructions for use**

Tchibo GmbH D-22290 Hamburg · 161319FV05X06XVI · 2026-08

Dear Customer

Your new mini camera is straightforward to use and extremely compact – it will fit into even the smallest of pockets.

You can take original photos using a variety of colour filters, or record cool film sequences in video mode.

We hope you enjoy using your new product!

Your Tchibo Team



www.tchibo.de/instructions

Contents

4 Safety warnings

8 At a glance (features)

11 Display screens

13 Prior to first use
13 Charging the battery
14 Information on rechargeable batteries
14 Selecting the menu language
15 Inserting and removing the microSD card
16 Formatting the microSD card
16 Information about the microSD card
17 Setting the date and time

18 Basic functions
18 Switching on and off
18 Changing the operating mode
19 Switching the sound on/off

20 Settings
20 Accessing the settings menu
20 Navigating the menu
21 Exiting the settings menu
21 Settings menu
23 Photo editing menu

24 Operating the camera
24 Taking photos
24 Recording videos
25 Viewing photos/videos (playback)
25 Deleting photos/videos

26 Resetting

26 Cleaning and storage

27 Problems / solutions

28 Technical specifications

30 Disposal

Safety warnings

Read the safety warnings carefully and only use the product as described in these instructions to avoid accidental injury or damage.

Keep these instructions for future reference. If you give this product to another person, remember to also include these instructions.

Intended use

The product is suitable for capturing digital photos and video sequences.

Use the product only in moderate climatic conditions.

Respect the privacy of others!

Danger to children

- This product is not a toy. Keep the product out of the reach of children.
- Keep packaging materials and small parts out of the reach of children. They pose several risks, including the risk of suffocation/choking!

Danger due to electricity

- Do not immerse the product in water or any other liquids. Also protect it against dripping and splashing water.
- Do not use the device in damp or wet environments.
- Do not use the product if it shows visible signs of damage.
- Do not make any modifications to the product. Do not forcefully open the casing. Have repairs to the product carried out only by a specialist workshop. Improper repairs can result in considerable danger to the user.

When charging the product via the mains power supply, note the following:

- Use only suitable mains adapters for charging the product (see "Technical specifications").
- Do not use or attempt to repair faulty mains adapters.
- Only connect the device to a properly installed power socket with a mains voltage that complies with the technical specifications of the mains adapter. The product must not be connected to the mains in damp rooms.
- Disconnect the mains adapter from the power socket during use if malfunctions occur, after use, during thunderstorms and before cleaning the device. Always pull on the mains adapter, not on the connection cable.
- Make sure the product is charged using a power socket that is easily accessible, so that you can quickly disconnect it in an emergency.
- Do not put any containers containing liquid, such as vases, on top of or within close proximity of the product, as the receptacle may tip over and the liquid may compromise electrical safety. There is a risk of electric shock.
- Do not charge the product in the vicinity of explosive gases.

Danger due to explosion/fire/burns

- The rechargeable battery is firmly built into the product and cannot and must not be replaced or removed. There is a risk of explosion if the battery is replaced incorrectly. If a rechargeable battery is defective, contact a specialist workshop.
- Do not place any sources of naked flames such as burning candles near the product. The product must be kept away from candles and other naked flames at all times to prevent the spread of fire.

- The product contains a rechargeable lithium battery. This battery must not be taken apart, thrown into fire or short-circuited.
- Do not modify and/or deform/heat/dismantle rechargeable batteries. Do not allow damaged rechargeable batteries to come into contact with water.
- Avoid storing, charging and using the product at extreme temperatures and in areas of extremely low air pressure (e.g. at high altitudes).
- The rechargeable battery/product becomes warm while charging. Do not cover it.
- If the product overheats, starts to smoke or suddenly gives off a strong odour, disconnect it from the USB cable immediately.

Material damage

- Taking the product from a cold place to a warm place may cause condensation to form inside it. In this case, leave the product switched off for a few hours.
- Do not drop the product or subject it to other forms of severe physical impact or prolonged exposure to moisture.
- Do not under any circumstances open or remove any part of the casing. Do not insert any objects into the openings in the casing.
- Protect the product from ...
  ... intense heat, such as direct sunlight, radiators or in a car.
  ... dust, sand and moisture.
- When inserting or removing the memory card, ensure that the camera, your hands and the memory card are completely dry.
- Before cleaning the camera, disconnect it from the computer or external power supply.

- Do not use the camera continuously for a prolonged period while it is being charged. This can cause it to overheat and shut down automatically.
- Do not use any caustic, aggressive or abrasive products for cleaning.

Caution – data security / loss of data

- Do not expose the camera or memory cards to magnets or magnetic fields. A magnetic field can damage or completely erase stored data. It may also cause permanent damage to the storage media. Damage to the camera and repairs may also result in an unavoidable loss of data.

Note

- The camera and memory card may feel warm after prolonged continuous use. This is perfectly normal and does not constitute a malfunction.
- If you no longer wish to use the product, or if it is damaged, delete all stored personal data before disposing of it.

At a glance (features)

Front

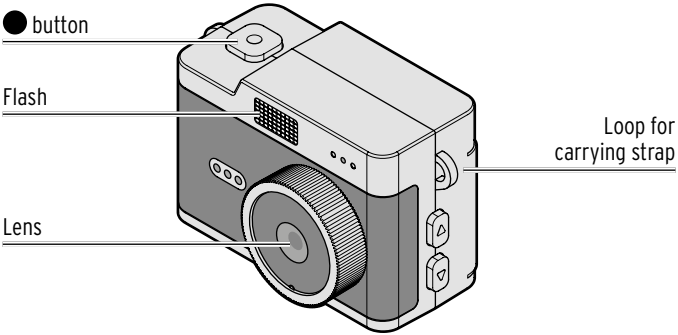

button • Switch on/off
- In photo mode : take a photo
- In video mode : start/stop recording
- In playback mode : start/pause video
- In the menu: confirm selection

Back

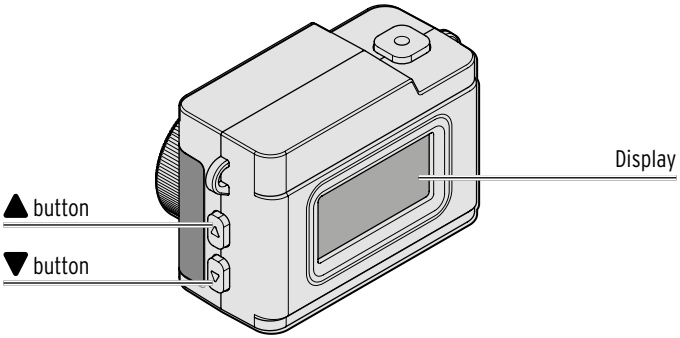

▲ button • Change mode
- In photo and video mode : turn sound on/off
- In playback mode : previous photo/video
- In playback mode : open the settings menu
- In the menu: navigate up
- In the menu: close the menu

▼ button • In photo mode : select colour filter
- In playback mode : open the photo editing menu
- In playback mode : next photo/video
- In the menu: navigate down

Base

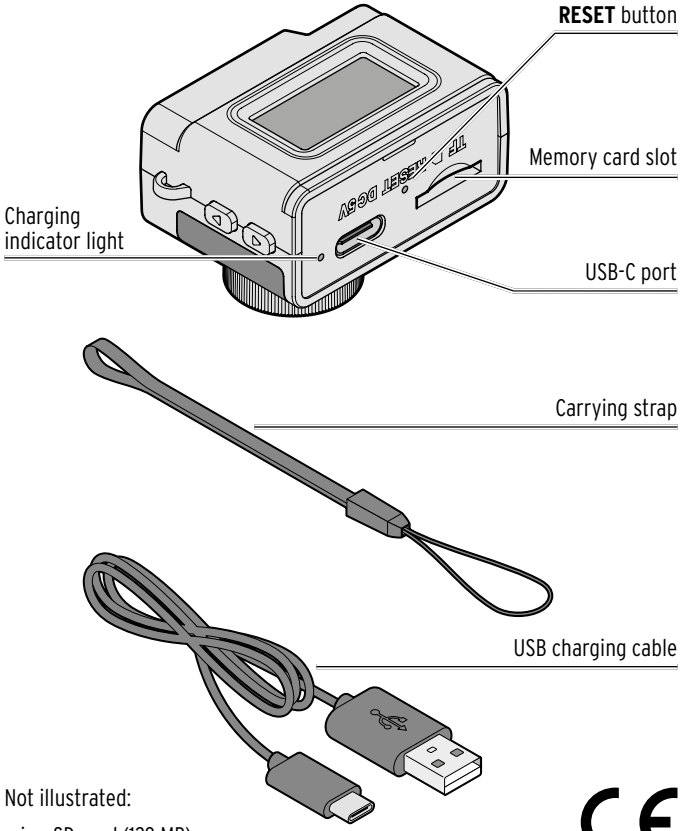

Not illustrated:

microSD card (128 MB)

CE

Display screens

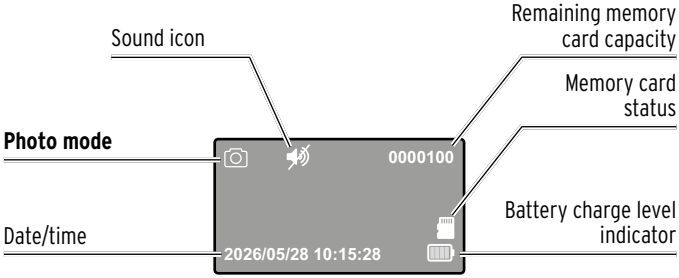

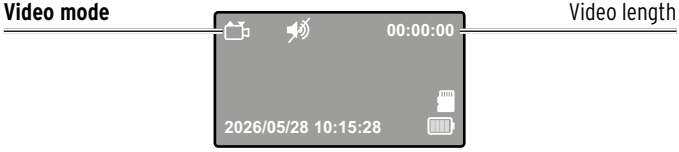

Playback mode (photo)

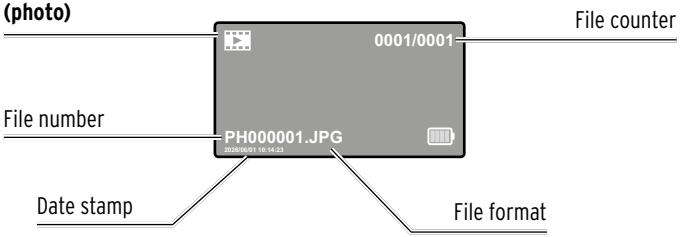

Playback mode (video)

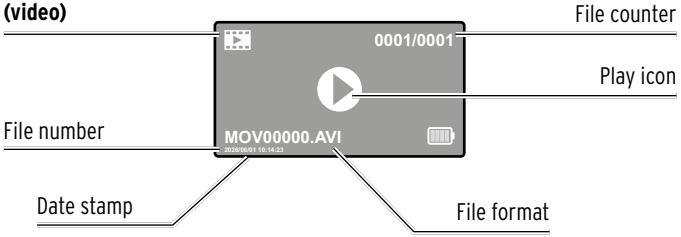

Prior to first use

Remove the protective film from the lens.

Charging the battery

The battery icon on the display indicates the battery charge level.

Charge the battery fully before using the device for the first time. This can take up to 2 hours.

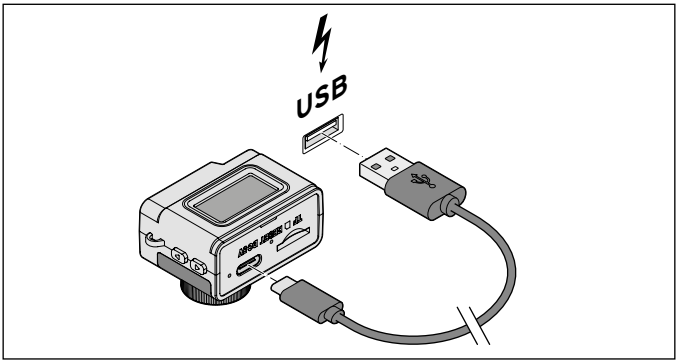

You will need a 5V 1A USB mains adapter; other types are not suitable.

1. Connect the supplied charging cable to the camera's USB-C port and to a suitable USB mains adapter (not included) or the USB port on a computer that is switched on.

When you connect the camera to the power supply, the "charging" battery icon appears on the display and the charging indicator light lights up red.

When you switch the camera on (see "Basic functions" chapter, "Switching on and off" section), the "charging" battery icon flashes in the bottom right-hand corner of the display.

Once the rechargeable battery is fully charged, the indicator light will go out.

2. Unplug the mains adapter from the power socket, then disconnect the cable from the camera.

If you connect the product to a PC to charge it, eject the camera before disconnecting the cable and make sure that you take all the usual precautions for backing up your data.

When you disconnect the camera from the power supply, the battery icon disappears or stops flashing.

Information on rechargeable batteries

- When the battery charge level is low, the message ***Low battery*** will appear. The camera will then switch itself off after about 5 seconds.
- Charge the rechargeable battery as soon as a low charge level is indicated. If the rechargeable battery is completely flat and the camera can no longer be switched on, allow it to charge for a minimum of 30 minutes.
- To preserve the full capacity of the rechargeable battery for as long as possible, you should fully recharge the battery every 2 to 3 months, even if you do not use the product.
- Charge the batteries in an environment between +10 and +40 °C.
- The batteries will best hold their charge at room temperature. The lower the surrounding temperature, the shorter the playback time.

Selecting the menu language

You may need to set the menu language prior to first use.

1. Press and **hold** ● to switch on the camera.

You are currently in photo mode [◎].

2. Press ▲ **twice**, **briefly** and firmly, to enter playback mode [▶].
3. Press and **hold** ▲ to open the settings menu.
4. Repeatedly press ▼, **briefly** and firmly, until you have selected ***Language***.

5. Press ● **briefly** to open the selected menu item.
6. Use ▲ and ▼ to select the desired language.
7. Press ● **briefly** to confirm the selected language.
8. Press and **hold** ▲ firmly to exit the settings menu.

You are now back in photo mode [camera].

Inserting and removing the microSD card

The camera does not have any internal storage. You will need a microSD card.

1. Press and **hold** ● to switch off the mini camera and, if necessary, disconnect it from the power supply.

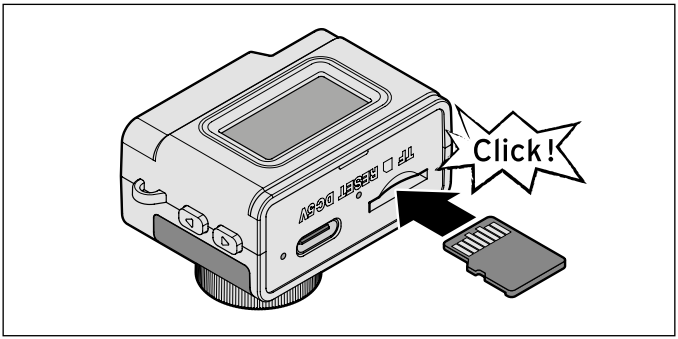

1. Insert the card into the slot as shown until you feel it click into place.
   You can only insert the card in one direction.
   If the card doesn't slide in easily, do not force it – check the direction.

▷ Gently press the card to release it – it will then spring out.
Remove the card completely.

No card briefly appears on the display and then disappears.

If no memory card is inserted, the card icon on the display has a **red X** over it.

Formatting the microSD card

New cards, or cards that you have previously used in other cameras, must be formatted before you use them.

1. Insert the microSD card.
2. Press and **hold** ● to switch on the camera.

You are currently in photo mode.

3. Press ▲ **twice**, **briefly** and firmly, to enter playback mode.
4. Press and **hold** ▼ to open the photo editing menu.
5. Press ▼ **briefly** and firmly to select **Format**.
6. Press ● **briefly** to open the selected menu item.
7. When the confirmation prompt appears, select …

   … ***OK*** to format the memory card.

   … ***Cancel*** to abort the process.

   After the formatting process has been completed, the camera is still in the photo editing menu.
8. Press and **hold** ▲ firmly to exit the photo editing menu.

You are now back in photo mode.

Information about the microSD card

To take photos and record videos, a microSD card (up to 128 GB) must be inserted.

The camera displays the following messages relating to the memory card:

- When you press ● to take photos or record videos:
  No card – There is no memory card inserted.

- In playback mode : ***No file*** – There is no memory card inserted or an empty memory card without files on it has been inserted.
- In photo and video mode : ***SD card is full*** – The memory card is full and you cannot take any more photos or record any more videos.
- When formatting: ***Please wait ...*** – The memory card is currently being formatted and is unavailable. You cannot take any photos or record any videos.
- ***Formatting successful*** – Formatting is complete.
- ***Formatting failed*** – Formatting could not be carried out. Use a different memory card.

Setting the date and time

You can configure the camera to add a date stamp to your photos (see "Settings" chapter). To do so, you will need to set the date and time.

1. Press and **hold** ● to switch on the camera.

You are currently in photo mode .

2. Press ▲ **twice**, **briefly** and firmly, to enter playback mode .
3. Press and **hold** ▼ to open the photo editing menu.
4. Repeatedly press ▼ **briefly** and firmly until you have selected ***Date/time***.
5. Press ● **briefly** to open the selected menu item.
6. Set the year > month > day > hour > minute > second in turn.

▷ **Briefly** and firmly press ...
... ▲ to increase the value you wish to set and ...
... ▼ to decrease it.

▷ Press ● **briefly** to confirm the value and bring up the next value, or to exit the menu item once all values have been set.

You are now back in the photo editing menu.

7. Press and **hold** ▲ firmly to exit the photo editing menu.

You are now back in photo mode 📷.

After returning the camera to the factory settings (see "Reset" in the "Settings" chapter) or performing a reset (see chapter "Resetting"), you will need to set the time again.

Basic functions

Switching on and off

▷ Press and **hold** ● to switch on the mini camera.

WELCOME appears on the display and, if the sound is switched on, a melody sounds.

▷ Press and **hold** ● to switch off the mini camera.

GOOD BYE appears on the display and, if the sound is switched on, a melody sounds. The display then switches off.

Note the following:

The camera switches off automatically ...

... depending on the auto power off setting (see "Settings" chapter).

... when the rechargeable battery is almost or completely flat.

Changing the operating mode

When you first switch the camera on, you are in photo mode 📷.

1. Press ▲ **briefly** and firmly to enter video mode 📹.
2. Press ▲ again, **briefly** and firmly, to enter playback mode 🎞.

Exiting video mode

1. Press ▲ **briefly** and firmly to enter playback mode .
2. Press and **hold** ▲ .

You are now in the settings menu.

3. Press and **hold** ▲ again.

You are now back in photo mode .

To exit video mode , you can also switch the camera off and then back on again.

Exiting playback mode

1. Press and **hold** ▲ .

You are now in the settings menu.

2. Press and **hold** ▲ again.

You are now back in photo mode .

To exit playback mode , you can also switch the camera off and then back on again.

Switching the sound on/off

▷ In photo or video mode , press and **hold** ▲ to switch on the sound.

The speaker icon disappears from the display.

You will hear a melody and button sounds when you switch the camera on and off. Videos are played back with sound.

▷ In photo or video mode , press and **hold** ▲ to switch off the sound.

No melody will play when you switch the camera on and off and there will be no button sounds. Videos are played back without sound.

The speaker icon appears on the display.

Settings

In playback mode , you can adjust various settings for your camera.

You can open either the settings menu or the photo editing menu.

The settings menu contains:

- ***Size*** (photo)
- ***Resolution*** (video)
- ***Loop recording*** (video)
- ***Flash***
- ***Date stamp***
- ***Language***
- ***Sound***
- ***Auto power off***
- ***LCD off***
- ***Format***
- ***Date/time***
- ***Reset***
- ***Version***.

See also the "Settings menu" table.

As well as four options from the settings menu, the photo editing menu also includes *Delete*:

- ***Delete***
- ***Format***
- ***Date/time***
- ***Date stamp***
- ***Version***.

See also the "Photo editing menu" table.

Accessing the settings menu

1. Enter playback mode as described under "Basic functions" in section "Changing the operating mode".
2. Press and **hold** ...
   ... ▲ to open the settings menu or ...
   ... ▼ to open the photo editing menu.

Navigating the menu

▷ Press ▲ or ▼ **briefly** and firmly to switch between the individual menu items.

▷ Press ● **briefly** to confirm your selection.

To set the time or date in the *Date/time* menu item ...

▷ **Briefly** and firmly press ...
... ▲ to increase the value you wish to set and ...
... ▼ to decrease it.

▷ Press ● **briefly** to confirm the value and bring up the next value, or to exit the menu item once all values have been set.

Exiting the settings menu

▷ Press and **hold** ▲ to exit the settings menu or the photo editing menu.

You are now back in photo mode [◎].

Settings menu

Menu item	Selection
Size (photo)	12 MP • 10 MP • 8 MP • 5 MP • 3 MP • 2 MP • 1 MP The higher the resolution, the better the image quality, but the more storage space it takes up. The top line indicates the highest resolution.
Resolution (video)	VGA • 720p • 1080p (The actual resolution of VGA is 640x480p, the other values are interpolated.) The higher the resolution, the better the video quality, but the more storage space it takes up. The top line indicates the highest resolution.

Loop recording (video)	3 min • 5 min • 10 min The camera automatically restarts recording as soon as the set time period has elapsed, and continues to do so until the memory card is full. A microSD card with a storage capacity greater than 128 MB is required for this option.
Flash (photo)	On • Off
Date stamp	On • Off The date and time are displayed in photos and videos.
Language	Deutsch • Français • Italiano • English • Čeština • Polski • Slovenčina • Magyar • Türkçe
Sound	On • Off Configure whether a melody plays when you switch the camera on and off, whether there are button sounds and whether videos play back with sound.
Auto power off	Off • 1 min • 3 min Configure whether and when the camera switches off when not in use.
LCD off	Off • 1 min • 3 min Configure whether and when the display switches off when not in use.

Format	Cancel • OK Format the inserted microSD card. Warning: If you confirm with ***OK***, no further prompt will appear and the card will be formatted straight away. Formatting will result in the irreversible loss of all data on the storage medium.
Date/time	Year • Month • Day • Hour • Minute • Second
Reset	Cancel • OK Reset all settings to the factory settings. Data on the microSD card is not affected.
Version	AX3295B-V2.1 Camera software version

Photo editing menu

Menu item	**Selection**
Delete	Cancel • OK
Format	Cancel • OK Format the inserted microSD card. Warning: If you confirm with ***OK***, no further prompt will appear and the card will be formatted straight away. Formatting will result in the irreversible loss of all data on the storage medium.
Date/time	Year • Month • Day • Hour • Minute • Second

Date stamp	On • Off The date and time are displayed in photos and videos.
Version	AX3295B-V2.1 Camera software version

Operating the camera

To take photos and record videos, as well as to play them back, a microSD card (up to 128 GB) must be inserted.

Taking photos

1. Enter photo mode as described under "Changing the operating mode".
2. Press ● to take a photo.

Selecting a colour filter

▷ Before taking a photo, press ▼ **briefly** and firmly to choose between the different colour filters: red › green › blue › black and white › colour › red, etc.

Recording videos

1. Enter video mode as described under "Changing the operating mode".
2. Press ● **briefly** to start recording.

A red dot flashes in the top right-hand corner of the display and the video duration counts up.

The built-in microphone records the sound.

3. To stop the recording, press ● **briefly**.

The red dot disappears and the remaining capacity of the memory card is shown in the top right-hand corner of the display.

Viewing photos/videos (playback)

Photos (JPG) and videos (AVI) taken with the camera can be accessed here.

1. Enter playback mode as described under "Changing the operating mode".
2. Press ▲ or ▼ **briefly** and firmly to browse through the stored photos and videos.

▷ Press ● **briefly** to start and pause video playback.

Deleting photos/videos

1. Enter playback mode as described under "Changing the operating mode".
2. Press ▲ or ▼ **briefly** and firmly to select the photo or video you want to delete.
3. Press and **hold** ▼ to open the photo editing menu.

Delete is highlighted in colour.

4. Press ● **briefly** to open the ***Delete*** menu item.
5. When the confirmation prompt appears, select …

   … ***OK*** to delete the photo or video.

   … ***Cancel*** to abort the process.

- Once you have deleted the photo or video, you will return to playback mode .
- If you abort the deletion process, you will return to the photo editing menu.

▷ Press and **hold** ▲ to exit the photo editing menu.

Resetting

If the camera stops responding or is behaving unusually, perform a reset.

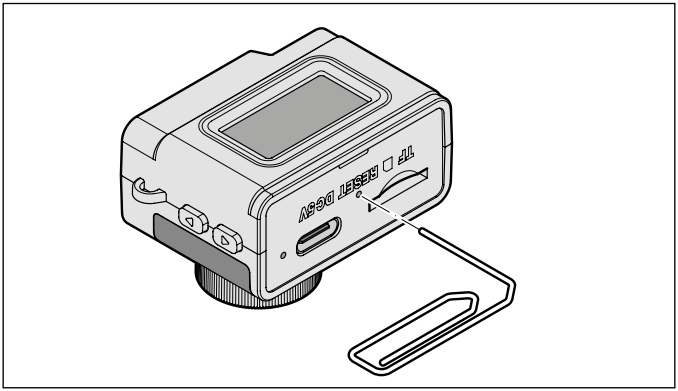

▷ Press the reset button in the hole next to the USB port using a pointed object (e.g. a straightened paper clip).

Cleaning and storage

▷ Blow dust off the lens or display using a small air blower designed for cameras. Alternatively, use a soft brush.

▷ If necessary, you can gently wipe the casing with a damp cloth.

▷ Store the camera in a dry, dust-free location.

Problems / solutions

The camera switches off again immediately after being switched on, or will not switch on at all.	• Is the rechargeable battery flat? • If the rechargeable battery is fully charged: Remove the microSD card and reinsert it, or reset the camera (see "Resetting" section).
The camera cannot be switched off after charging.	• Perform a reset.
The camera switches off while taking a photo/recording a video.	• Is the rechargeable battery flat?
The camera will not charge.	• Check whether the mains adapter is suitable: output 5 V 1 A. The rechargeable battery cannot be charged with other mains adapters. • Check the charging indicator light: if it lights up red, the battery is charging; when it goes out, the battery is fully charged.
Colour distortion on the display.	• Have you selected a colour filter? • Perform a reset.

Technical specifications

Model:	763 518
Weight:	18 g
Dimensions:	44.5 * 28.3 * 24.5 mm
Input:	5 V DC 1 A USB
Charging time:	approx. 2 hours
Operating time with fully charged battery:	approx. 60 minutes (continuous recording; may vary depending on environmental conditions – battery drains faster in cold temperatures)

Mains adapter (not included):

Input:	AC 100–240 V 50/60 Hz
Output:	DC 5 V 1.0 A

Only use a protection class II mains adapter approved for use with household appliances for charging.

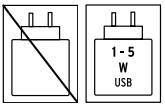

The power output of the charger must cover a range from 1 watt (minimum output required by the radio equipment) to 5 watts (output required for the maximum charging speed).

Sensor:	0.3 MP CMOS
Photo resolution:	12 MP, 10 MP, 8 MP, 5 MP, 3 MP, 2 MP, 1 MP (interpolated)
Video resolution:	1080p (1920x1080), 720p (1280x720), VGA (interpolated)

Lens:

Effective focal length:	1.40 mm
Aperture (f-number):	f/2.8
Optical field of view:	Diagonal 68°
Distortion:	<1.0%

Display:	LCD
Size:	0.96" IPS
Resolution:	80xRGBx160
Speaker:	3 mW~5 mW
Ambient temperature:	+10 to +40 °C
Ambient humidity:	20% to 85%
Card slot for:	microSD up to 128 GB
Photo format:	JPG
Video format:	AVI
Connections:	microSD card slot, USB-C port

Information about the rechargeable battery

Rechargeable battery:	lithium-ion 3.7 V 200 mAh
Watt-hour rating:	0.74 Wh (tested as per UN 38.3)
Manufacturer:	Deng zhou Wanhong Lithium Battery Co., Ltd.
Email:	3003455824@qq.com
Manufacturing date:	06/2026
Weight:	4.2 g
Hazardous substances:	lithium cobalt oxide, aluminium, polyvinylidene fluoride, graphite, carboxymethylcellulose, styrene butadiene rubber, copper, nickel, lithium hexafluorophosphate, polyethylene, nylon
Suitable extinguishing media:	Use plenty of cold water; do not use warm or hot water. Halogenated fire-extinguishing agents must not be used. Dry powder extinguishing agents, sand and earth are suitable alternatives.
Critical raw materials (0.1% w/w):	lithium cobalt oxide

Ambient temperature:	+10 to +40 °C
Made exclusively for:	Tchibo GmbH, Überseering 18, 22297 Hamburg, Germany

In the course of product improvement, we reserve the right to make technical and visual modifications to the product.

Disposal

The product, its packaging and the built-in rechargeable battery have been manufactured from valuable materials that can be recycled. Recycling reduces the amount of refuse and preserves the environment.

Dispose of the **packaging** at a recycling point that sorts materials by type. Make use of the local facilities provided for collecting paper, cardboard and lightweight packaging.



Devices, **single-use batteries and rechargeable batteries** marked with this symbol must not be disposed of along with household waste!

You are legally obliged to dispose of old devices separately from household waste. Electronic devices contain hazardous substances and, if stored or disposed of improperly, may cause harm to health and the environment. Information about collection points where old devices can be disposed of free of charge is available from your local authorities. Flat single-use and rechargeable batteries must be handed in at a local authority collection point or returned to a battery retailer. Tape off the contacts of lithium single-use/rechargeable batteries prior to disposal.

Product number: 763 518

Made exclusively for:
Tchibo GmbH, Überseering 18, 22297 Hamburg, Germany